R-2000*i*A™ Series

FANUC Robotics

Basic Description

The R-2000*i*A series is FANUC Robotics' latest-generation, heavy-payload, high-performance family of industrial robots. The R-2000*i*A represents an advanced evolution of the company's industry-leading S-430*i* series of robots. While maintaining many of the features of the S-430*i*, the R-2000*i*A provides even higher value through improved performance, reliability and maintainability. It features the SYSTEM R-J3*i*B intelligent robot control system.

R-2000*i*A, the Solution for:

- Automotive spot welding and general assembly
- General industrial applications
- Part transfer
- Material removal
- Dispensing
- Machine loading

Benefits

- Slim arm and wrist assemblies minimize interference with system peripherals and allow operation in confined spaces.
- Large allowable wrist moments and inertias meet a variety of heavy handling challenges.
- Many process attachment points make integration easier.
- Stationary outer arm simplifies hose and cable dressout, prolonging service life.
- Proven, reliable FANUC servo drives provide highest uptime and productivity.
- Longer maintenance intervals equate to lower operating costs.
- Fewer mechanical components reduce down time, increase mean time between failure (MTBF) and minimize spare part requirements.

- High-performance motion yields fast cycle times and high throughput.
- Wrist flange and base mounting are identical to the S-430*i*, allowing for seamless backward compatibility.
- R-2000*i*A/165F can reach all areas of S-430*i*W/165 work envelope, making replacement easy.

Features

Mechanical:

- Large work envelope with ability to reach overhead and behind
- 6 axes of motion
- Slim profile design
- RV reducers for all axes
- Elimination of counterweight increases available workspace
- Process/application cables routed through the arm
- No motors at wrist

Control:

- B-size cabinet
- Quick change amplifier (<5 min)
- Fast boot-up time
- Easy connections to a variety of I/O, including a number of distributed I/O networks

Software:

- Specific tool packages for various applications

Options

- Three faceplate types
- Electrically insulated faceplate
- Internal I/O cables
- Harsh environment protection
- Adjustable hard stops for J1-J2-J3
- Precision baseplate for mounting

R-2000*i*A/165F

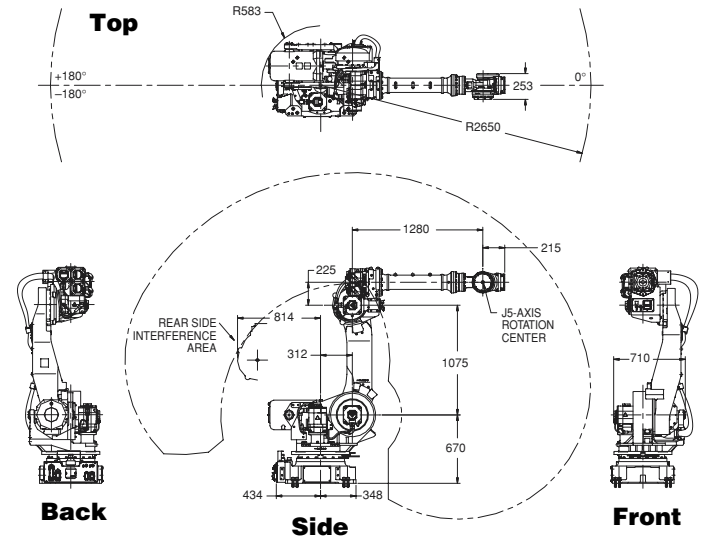

ISO Flange Wrist 165F, 165R, 125L

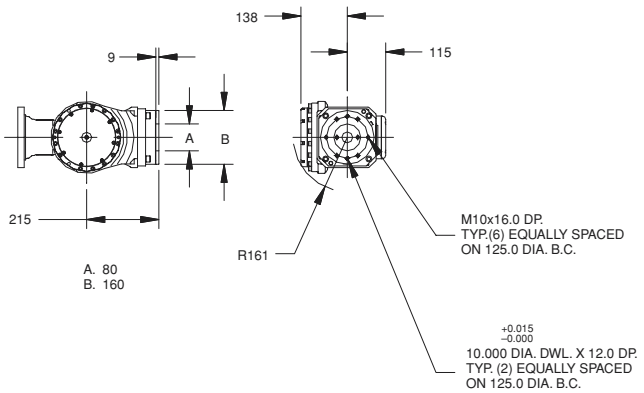

R-2000*i*A/200F

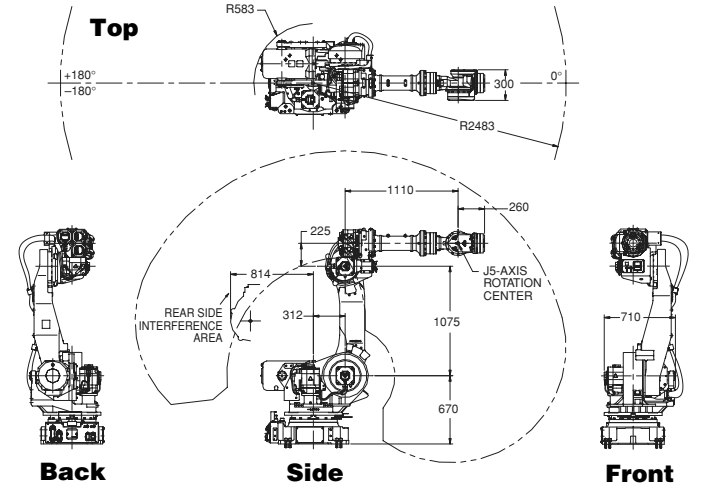

ISO Flange Wrist 200, 200R, 200FO

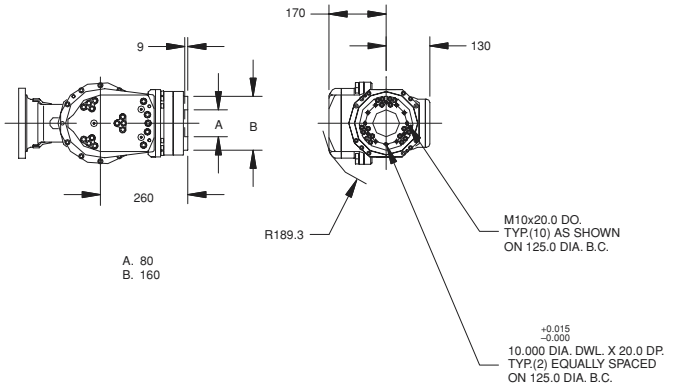

R-2000*i*A/125L

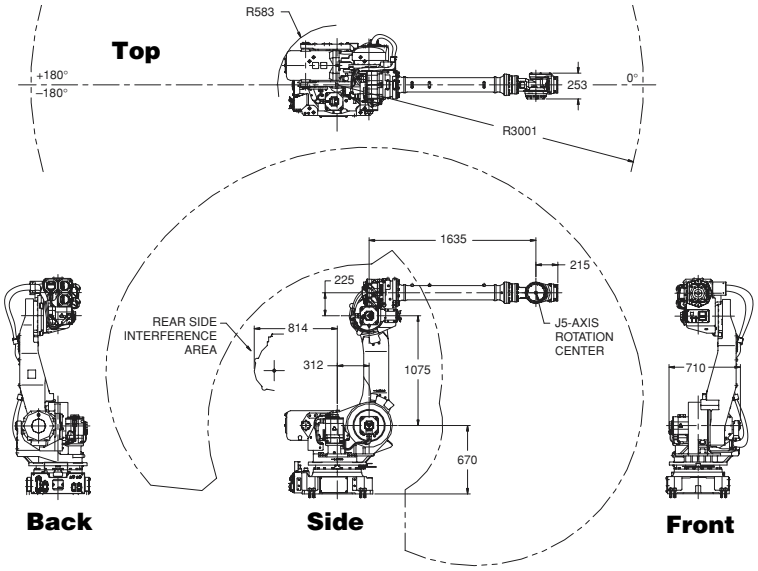

ISO Flange Wrist 165CF

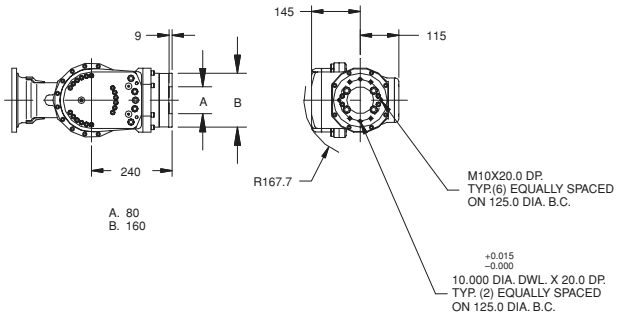

R-2000*i*A/165R

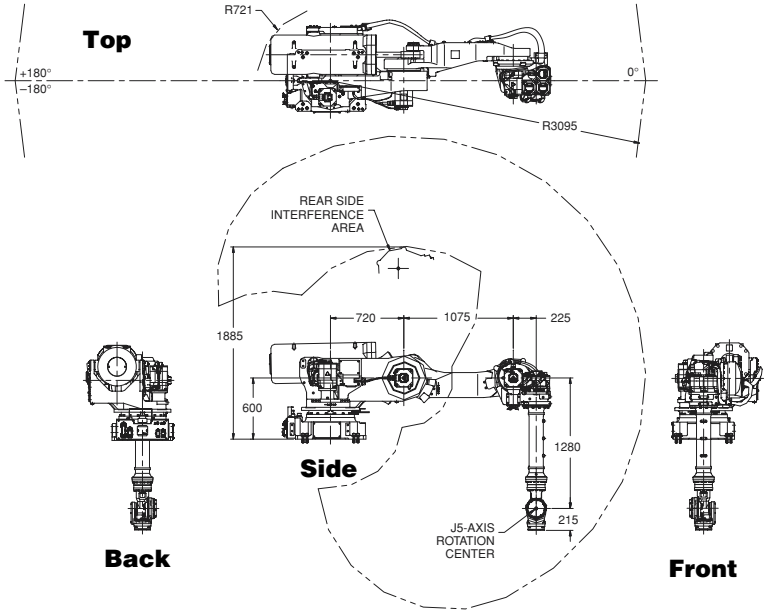

R-2000*i*A/200R

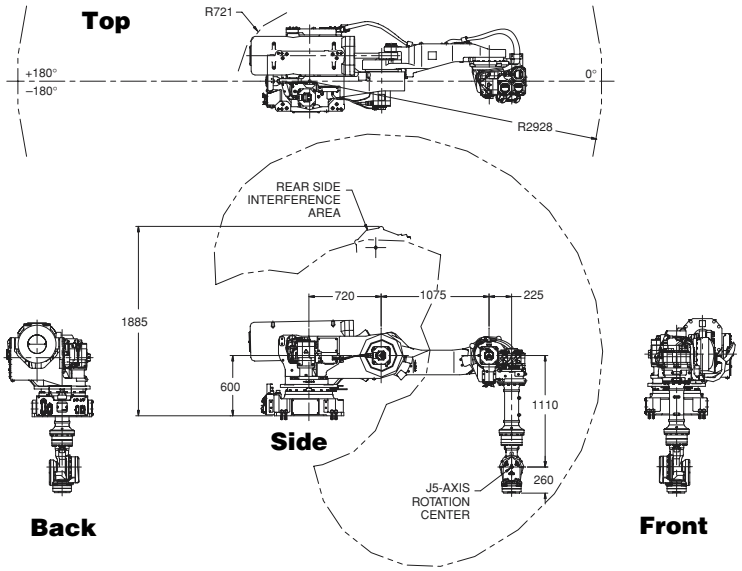

R-2000*i*A/200FO

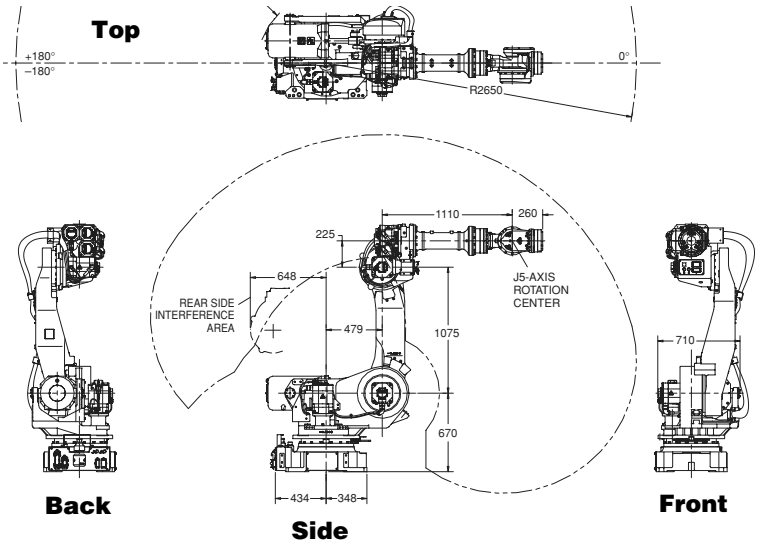

R-2000*i*A/165CF

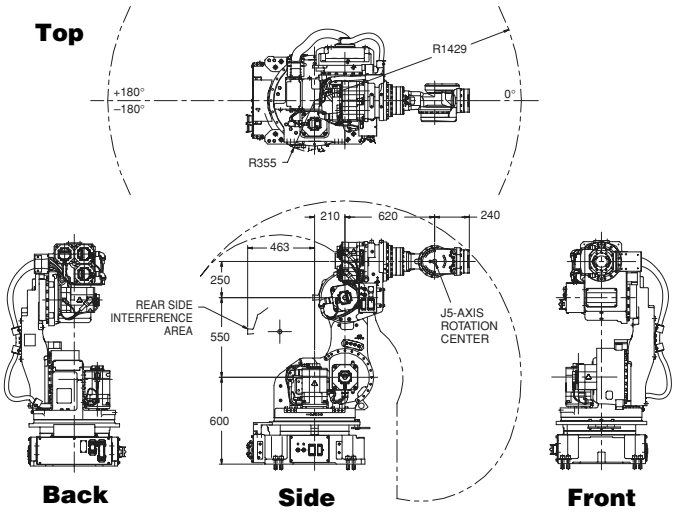

Isometric 165F

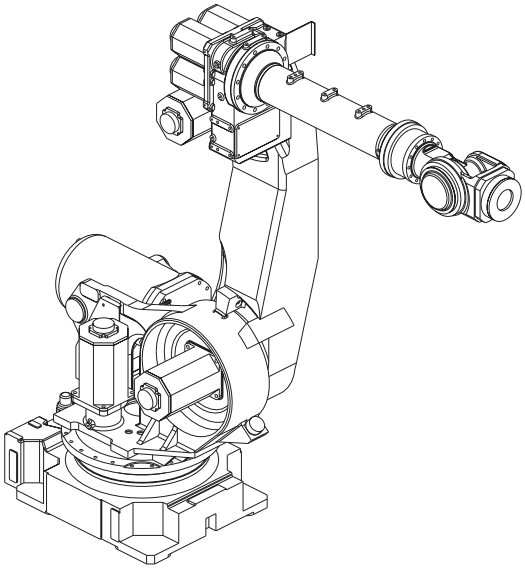

Footprint (All models)

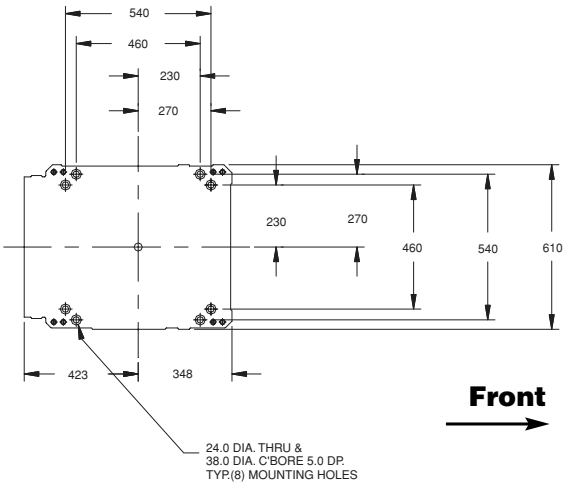

Note: Dimensions shown in millimeters.

R-2000*i*A Specifications

Items		/165F	/200F	/125L	/165R	/200R	/165CF	/200FO
Axes		6	6	6	6	6	6	6
Payload - Wrist (kg)		165	200	125	165	200	165	200
- J3 Arm (kg)		25	25	20	25	0	25	25
- J2 Base (kg)		550	550	550	550	550	550	550
Reach (mm)		2650	2483	3001	3095	2928	1429	2650
Repeatability (mm)		± 0.3	± 0.3	± 0.3	± 0.3	± 0.3	± 0.3	± 0.3
Interference radius (mm)		583	583	583	721	721	355	583
Motion range (degrees)	J1	360	360	360	360	360	360	360
	J2	135	135	135	185	185	165	135
	J3	362	367	352	365	365	250	350.4
	J4	720	720	720	720	720	720	720
	J5	250	250	250	250	250	250	250
	J6	720	720	720	720	720	720	720
Motion speed (degrees/sec.)	J1	105	90	105	105	90	110	90
	J2	105	85	105	90	85	90	85
	J3	105	90	105	105	90	100	90
	J4	130	110	170	130	110	130	110
	J5	130	110	170	130	110	130	110
	J6	210	155	260	210	155	210	155
Wrist moment (kgf•m)	J4	94	130	60	94	130	93	130
	J5	94	130	60	94	130	93	130
	J6	47	70	35	47	70	46	70
Wrist inertia[1] ($kgf \cdot cm \cdot s^2$)	J4	800	1200	600	800	1200	900	1200/2200
	J5	800	1200	600	800	1200	900	1200/2200
	J6	410	600	230	410	600	450	600/2000
Mechanical brakes		All axes	All axes	All axes	All axes	All axes	All axes	All axes
Mechanical weight (kg)		1210	1240	1230	1540	1570	1050	1310
Mounting method		Floor	Floor	Floor	Shelf	Shelf	Floor	Floor
Installation environment								
Ambient temperature °C		0 to 45						
Humidity		Normally: 75% or less Short term (within a month): 95% or less No condensation (No dew or frost allowed)						
Vibration (m/s^2)		4.9 or less (0.5G or less)						
IP Rating		Wrist & J3 arm IP67, rest IP54 (IP55 optional)						
Purpose		Floor mount	Heavy duty flooor mount	Long arm floor mount	Shelf mount	Heavy duty shelf mount	Compact floor mount	Floor mount - forward option

Notes:

(1) Allowable load inertia at wrist can be switched by software parameters.

FANUC Robotics America, Inc.
3900 W. Hamlin Road
Rochester Hills, MI 48309-3253
(248) 377-7000
Fax (248) 276-4133

For sales or technical information, call:
1-800-47-ROBOT

marketing@fanucrobotics.com
www.fanucrobotics.com

Charlotte, NC
(704) 596-5121

Chicago, IL
(847) 898-6000

Cincinnati, OH
(513) 754-2400

Los Angeles, CA
(949) 595-2700

Toledo, OH
(419) 866-0788

Toronto, Canada
(905) 812-2300

Montréal, Québec
(450) 492-9001

Aguascalientes, Mexico
52 (449) 910-8000

Sao Paulo, Brazil
(55) (11) 3955-0599

©2003 FANUC Robotics America, Inc. All rights reserved. FANUC ROBOTICS LITHO IN U.S.A. FRNA-5/03